
Jingyu Du, PhD, CEng MIET, CMgr FCMI
Research Student, University of Bradford


Maksim Latosev
Assistant Electrification & Plant Maintenance Engineer, Network Rail


Zhongbei Tian, PhD, FHEA
Associate Professor, University of Birmingham


Jian-Ping Li, PhD, MIEEE
Assistant Professor, University of Bradford

Jingyu worked on East Coast Main Line maintenance for eight years between 2016 and 2024. His expertise lies in railway electrification, decarbonisation, and digitalisation. He was the maintenance manager in charge of this incident's initial response and fault finding.

Maksim began his railway career in 2002 as a train driver in Estonia. In 2022, he joined Network Rail, where he has been contributing to the maintenance of the East Coast Main Line. He focuses on asset compliance and the delivery of maintenance processes.

Zhongbei has led research projects funded by prestigious bodies including EPSRC, the Royal Society, Network Rail, RSSB, and Innovate UK. His research interests span railway traction power system modelling and analysis, energy efficiency, and sustainability.

Jian-Ping has extensive experience in maintenance engineering and reliability theory with Cambridge University and the University of Manchester before joining the University of Bradford in 2007. He is a prolific researcher, with over 120 research papers published.

THE ELECTRIFICATION SERIES: **INTEGRATION ACROSS ALL AREAS** OF THE RAIL INDUSTRY

RESPONDING TO UNCOMMON OVER HEAD LINE DE-ENERGISATION

KNOWLEDGE 200 ELECTRIFICATION & PLANT

ABSTRACT

Incidents of "loss of line light" in railway traction power supply systems can go unnoticed by electrical control room operators if traction circuit breakers have no "Unsolicited Changes of Status." This lack of fault-initiating information can complicate the investigation and delay service recovery. This article examines a rare but real incident on Britain's East Coast Mainline, where a 25 kV overhead line was unintentionally and repeatedly de-energised due to the combined impact of planned maintenance activities and a mechanical fault in power equipment's operating mechanism. The discussion here focuses on the incident's initial response, detailing how the team navigated the complexities and uncertainties to identify the root cause. By sharing this experience, this article provides valuable insights for the wider railway community to better mitigate unexpected service disruptions and enhance operational resilience and readiness.

Keywords: Railway Overhead Line Equipment, Traction Power Supply, Loss of Power, and Incident Response.

1. BACKGROUND

1.1. Loss of Line Light

On the driver's desk of electric trains, 'line light' is an indicator showing current being drawn from the OLE (Overhead Line Equipment). When the line light is lost and cannot be reset, it is an indication of a possible fault and usually requires immediate attention.

1.2. Traction Power Supply

The power supply infrastructure on the East Coast Main Line (ECML) had been upgraded [1], particularly around substations and 25 kV distribution switchgear. The incident occurred in a busy area on the ECML, where new substations including Feeder Station (FS) and Track Sectioning Cabin (TSC) were commissioned to increase the traction power supply's capacity. The feeding arrangement is briefly illustrated in **Figure 1**. The high-voltage electric circuit from a substation to the Overhead Line Equipment (OLE) on track includes isolators and circuit breakers. At the time of the incident, the infrastructure's maintenance duty was shared between internal maintenance staff and external project contractors.

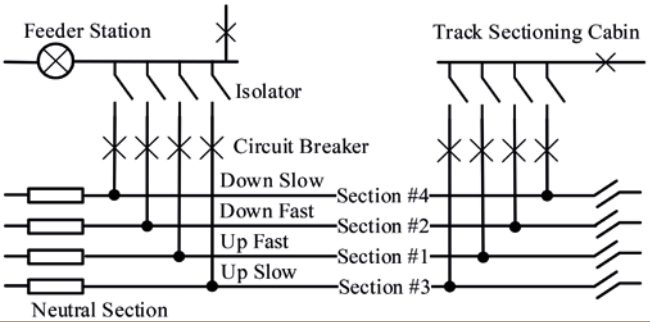

Figure 1: Overhead Line Traction Power Supply Diagram.

1.3. Mutual Inductance

Because of the residual voltage and mutual inductance between parallel overhead lines, even if a section is de-energised, the section could still hold 5 kV or higher of electricity.

1.4. Neutral Sections

The phase of the 25 kV electricity in OLE is alternating every 10-40 km and two different phases on the same track are separated with a neutral section. A pair of on-track magnets are installed on either side of each neutral section, so trains are aware of the entrance and exit of the neutral section. The electrical connection between the train's body and pantograph is opened while passing through the neutral section, to avoid electrical burning on the section's insulation material. The position of the magnets is specified in GLRT1210 [2] and checked periodically according to [3] and [4]. **Figure 2** shows OLE neutral sections and on track magnets.



Figure 2: Neutral Section (Left) and Magnets (Right).

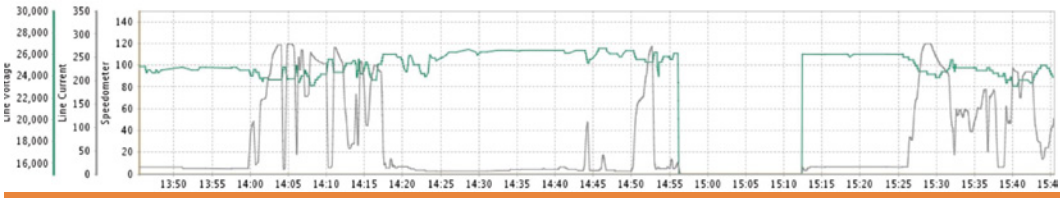

Figure 3: Voltage and Current Readings of 1D17.

2. INCIDENT OCCURRENCE

In the afternoon, two consecutive trains, 1H04 and 1W20, reported power losses shortly after exiting the Down Fast (DF) neutral section. Train 1H04 experienced a voltage drop to 3 kV, which then climbed slightly to 4 kV following a manual reset by the driver. Similarly, train 1W20 reported a voltage drop to 6 kV. In both cases, the voltage readings returned to normal levels after a brief period. Subsequently, no further issues were reported until approximately half an hour later, when train 1D17 reported a loss of power while transitioning from the Down Slow (DS) to the DF line. The voltage and current readings for 1D17 are displayed in **Figure 3**.

Incidents of loss of overhead line power (or 'line light') are usually related to 25 kV circuit breakers' Unsolicited Changes of Status (UCOS), i.e. 'tripping,' most times caused by foreign objects' invasion or OLE faults. The UCOS incidents occur quite often, on average around 0.5 times per year per km of track. The Electrical Control Room Operator (ECRO) receives notifications almost immediately when the 'tripping' occurs and escalates the issue to the Route Operating Centre (ROC). The response to this type of incident has been standardised and documented in technical publications such as GERT8000-AC, NR/OLE B05 and NR/ECR/002.

A notable challenge associated with this incident was the absence of any circuit breaker 'tripping,' which made fault identification difficult. The incident was reported verbally by onboard staff via phone lines, after noticing the "loss of line light", without precise location and time information. The presence of the neutral section added to the complexity of the situation. In hindsight, the initial focus on checking the neutral section may have delayed the response time. Avoiding such checks could have expedited the incident resolution in this case.

3. INITIAL RESPONSE

As none of the drivers travelling through the area reported any OLE defects, it was suspected that the condition of the magnets at the exit of the neutral section had deteriorated. This issue would result in electric trains not detecting the exit indication and, consequently, the onboard circuit breaker not closing.

Upon receiving the incident report, the standby OLE maintenance team was mobilised to the site with priority given to inspecting the integrity and functionality of the neutral section magnets. The team conducted tests to confirm the polarity, strength and position of the magnets. However, due to frequent train services and the requirement to cross the DS line to access the DF magnets, the test took approximately half an hour to complete.

While the team was on site, a loss of power report was received for train 1D17. Confused by the situation, the team liaised with the ECRO and decided to apply a live-line indicator to the DF electrical section and check the OLE's energisation. They found that the OLE was live, further compounding the confusion among the emergency response team.

Meanwhile, the maintenance manager noted from the Supervisory Control and Data Acquisition (SCADA) system that an intruder alarm had been triggered at the TSC. Subsequent investigations revealed that a group of power supply upgrade colleagues had been testing the high-voltage switchgear in the TSC. However, this activity should not have interrupted the electrical section's traction power supply, as the section was still expected to be live via the single-end feed from the FS.



Figure 4: Structure-Mounted Isolator in Open Position.

Relying on past experience, the manager decided to mobilise the OLE team to the substation compound. Upon arrival, the team found that the isolator for the DF section was in the open position (**Figure 4**), despite the ECRO confirming that the disconnector was indicating as closed.

4. FAULT IDENTIFICATION AND SERVICE RECOVERY

Upon further inspection, it was discovered that the mechanical linkage within the isolator's operating mechanism had become partially detached, likely due to a missing circlip. This detachment prevented the motor from operating the isolator's arm. Since the feedback to the SCADA system was linked to the motor rather than the disconnector arm itself, the issue was neither indicated to the ECRO nor on the indicator located within the auxiliary equipment enclosure.

The combination of planned testing at the TSC end and the faulty isolator led to the accidental de-energisation of the DF electrical section (**Figure 5**). During the testing, the circuit breaker was repeatedly opened and closed, causing the electrical section to be switched off and on. As a result, certain trains experienced power loss.

Although the testing was completed about an hour after the initial incident report, the maintenance team were unaware of the planned testing and were unfamiliar with the new switchgear. This caused delays as they initially needed to determine whether the isolator had been intentionally left in its position. During this period, DF trains were diverted to run via the DS line. Fortunately, due to the reduced COVID timetable in operation, there was no further impact on train services.

The cause of the incident was confirmed later in the darkness. Various options to rectify the fault were proposed and analysed, but none could avoid further severe disruptions to railway services. Repairing the isolator proved challenging as it required isolating the busbar.

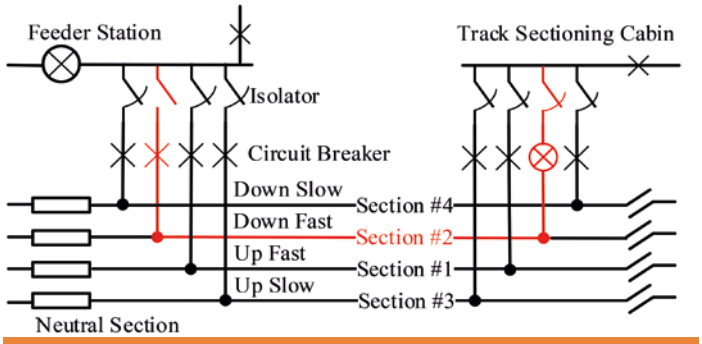

Figure 5: Down Fast Electrical Section De-energised.

Ultimately, normal operations resumed late in the evening, with the DF electrical section being back-fed from the TSC. The isolator was left out of use – it could not be remotely closed by the ECRO or manually operated by the maintenance staff on-site. The incident resulted in a total of 920 minutes of delay.

5. REFLECTION AND RECOMMENDATIONS

The after-action review of this incident highlighted several key observations and findings that provide insights into improving responses to similar events in the future. Below are four recommendations offered for peer suggestions.

5.1 Enhancing Interdepartmental Communication

Effective communication across departments, particularly regarding planned work in substations, is critical. Timely and proactive updates can play a pivotal role in navigating ambiguity, uncertainty and complexity during the initial response to rare incidents. Improved communication helps maintenance staff to access the necessary context quickly, leading to faster and more accurate decision-making.

5.2 Improving Record Availability and Accessibility

The accuracy, timeliness and completeness of substation operation and action records are vital. Easy and quick access to these records provides invaluable context for investigating the causes of unusual UCOS events. Such records not only offer a detailed background of the incident but also contribute to effective and rapid root cause identification.

5.3 Refining Incident Prioritisation Strategies

When responding to loss of power incidents without associated UCOS alarms, OLE damage or specific fault location information, maintenance staff should consider prioritising substation inspections. Equipment integrity, switchgear failures and operating mechanism malfunctions should be the areas to check. Incidents like this one are infrequent, occurring approximately once every two or three years. A more standardised approach can enhance the response efficiency in similar cases.

5.4 Enhancing Knowledge of Electrical Distribution Systems

Ongoing training and familiarisation for OLE maintenance staff on 25 kV electricity distribution systems, switchgear operations and protection mechanisms are essential. Building this knowledge base not only improves their decision-making capabilities during incidents but also fosters clearer and more effective communication across departments. Shared understanding of technical terminology helps information to be accurately conveyed and understood, reducing the risk of miscommunication.

6. SUMMARY

This incident highlighted the challenges of diagnosing and resolving rare and complex electrical faults in the railway network. The combination of a malfunctioning isolator and ongoing substation testing led to the railway's operational disruption. Initial ambiguity and limited familiarity with the new equipment compounded the challenges faced by the response team. Despite these obstacles, the collaborative effort enabled the situation to be resolved safely, albeit with delays.

To improve future responses, the review underscores the importance of timely and transparent interdepartmental communication, especially regarding planned substation work. Easily accessible operational records are critical for rapid fault investigation and understanding the context of abnormal power supply events. Furthermore, prioritising substation inspections in the absence of clear fault indicators and equipping OLE maintenance staff with advanced knowledge of 25 kV systems and switchgear can significantly enhance response efficiency and interdepartmental collaboration.

By addressing these areas, the railway industry can strengthen its resilience to rare incidents, minimise service disruption, and attain safe and reliable operations for both passengers and staff.

For any queries, please contact Jingyu Du at jdu5@bradford.ac.uk.

ACKNOWLEDGMENT

The authors would like to thank Liam Slade, William Robinson, Nick Dudley, Ashley Randall, Xin Guan, and other colleagues from Network Rail, London North Eastern Railway, Hitachi, FirstGroup, and other industrial partners for their input to either this article or the incident's response.

REFERENCES

[1] P. Stanton, "ECML Power Supply Upgrade," RailEngineer, 23 November 2017. [Online]. Available: https://www.railengineer.co.uk/ecml-power-supply-upgrade/#:~:text=The%20East%20Coast%20main%20line%20(ECML)%20Power,and%20power%20assets%20*%20**Foundations**%20110%20foundations. [Accessed 11 May 2025].

[2] AC Energy Subsystem and Interfaces to Rolling Stock Subsystem, GLRT1210, London: Rail Safety and Standards Board, 2022.

[3] "Specification of maintenance frequency and defect prioritisation of Overhead Line Electrification Equipment, NR/L2/ELP/21087," Network Rail, Milton Keynes, 06 June 2020.

[4] "Overhead Line Work Instructions, NR/L3/ /27237," Network Rail, Milton Keynes, 2021.

ROOTED IN OUR PAST. FOCUSED ON OUR FUTURE. #OurNextChapter



SLIDING FRICTION BUFFER STOPS

Rawie Friction Buffer Stops provide protection for track ends worldwide. They can be designed to suit all types of rolling stock, accommodating varied train weights and speeds.

RAWIE® SINCE 1882

Manufactured by A.RAWIE GmbH & Co. KG.
Tel: 0049 541 91 2070
bufferstops@rawie.de
www.rawie.de

SKELTON

Supplied in UK & Eire by H.J. Skelton & Co. Ltd.
Tel: 0044 1635 866877
sales@hjskelton.com
www.hjskelton.co.uk

THE PWI



TECHNICAL ARTICLE

www.thepwi.org

AS PUBLISHED IN
THE PWI JOURNAL OCTOBER 2025
VOLUME 143 PART 4

If you would like to reproduce this article, please contact: journaleditor@thepwi.org

PLEASE NOTE: Every care is taken in the preparation of this publication, but the PWI cannot be held responsible for the claims of contributors nor for the accuracy of the contents, or any consequence thereof.

in the PWI
the_pwi
the PWI
PWInstitution
PWInstitution